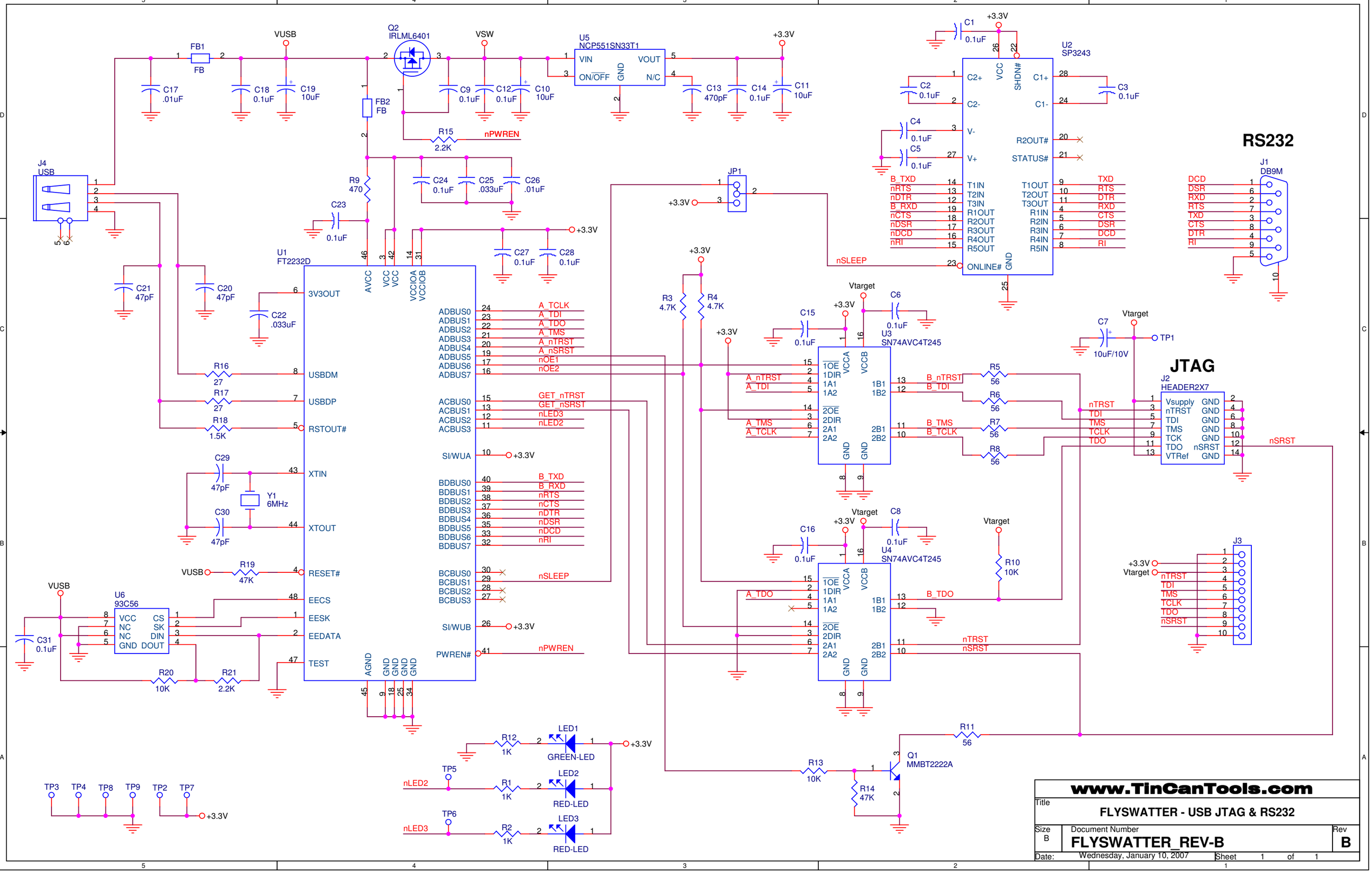
RS232
JTAG
U1 FT2232D
U2 SP3243
U3 SN74AVC4T245
U4 SN74AVC4T245
U5 NCP551SN33T1
U6 93C56
Q2 IRLML6401
Q1 MMBT2222A
J1 DB9M
J2 HEADER2X7
J3
J4 USB
JP1
Y1 6MHz
LED1 GREEN-LED
LED2 RED-LED
LED3 RED-LED
VUSB
VSW
+3.3V
Vtarget
nPWREN
nSLEEP
nSRST
TP1
www.TinCanTools.com
Title
FLYSWATTER - USB JTAG & RS232
Size B
Document Number
FLYSWATTER_REV-B
Rev B
Date: Wednesday, January 10, 2007
Sheet 1 of 1