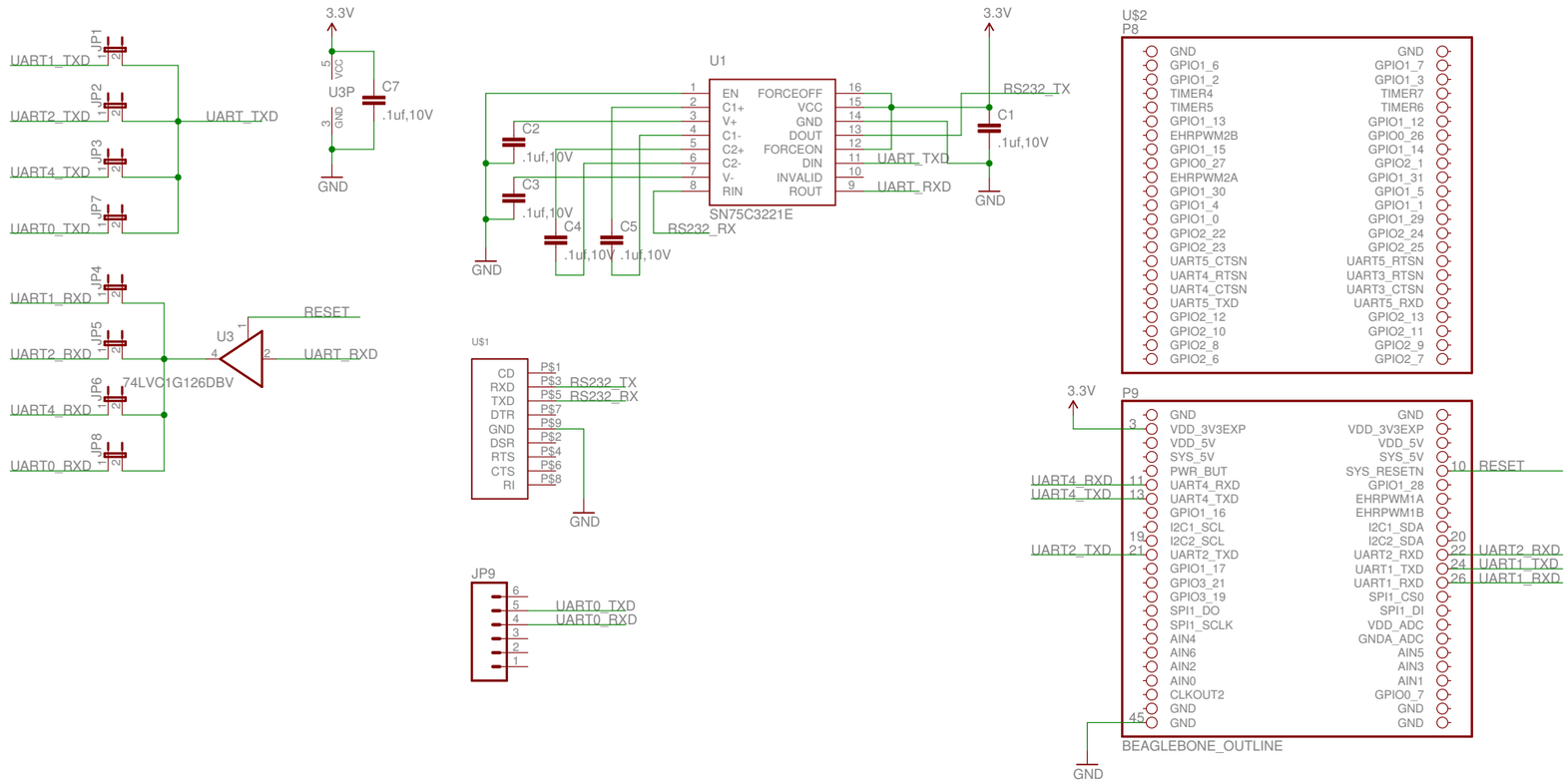

Released under the Creative Commons Attribution Share-Alike 3.0 License
http://creativecommons.org/licenses/by-sa/3.0
Design By: Daniel Jackson

RS232_Cape_B1
11/25/13 10:47 AM
Sheet: 1/1