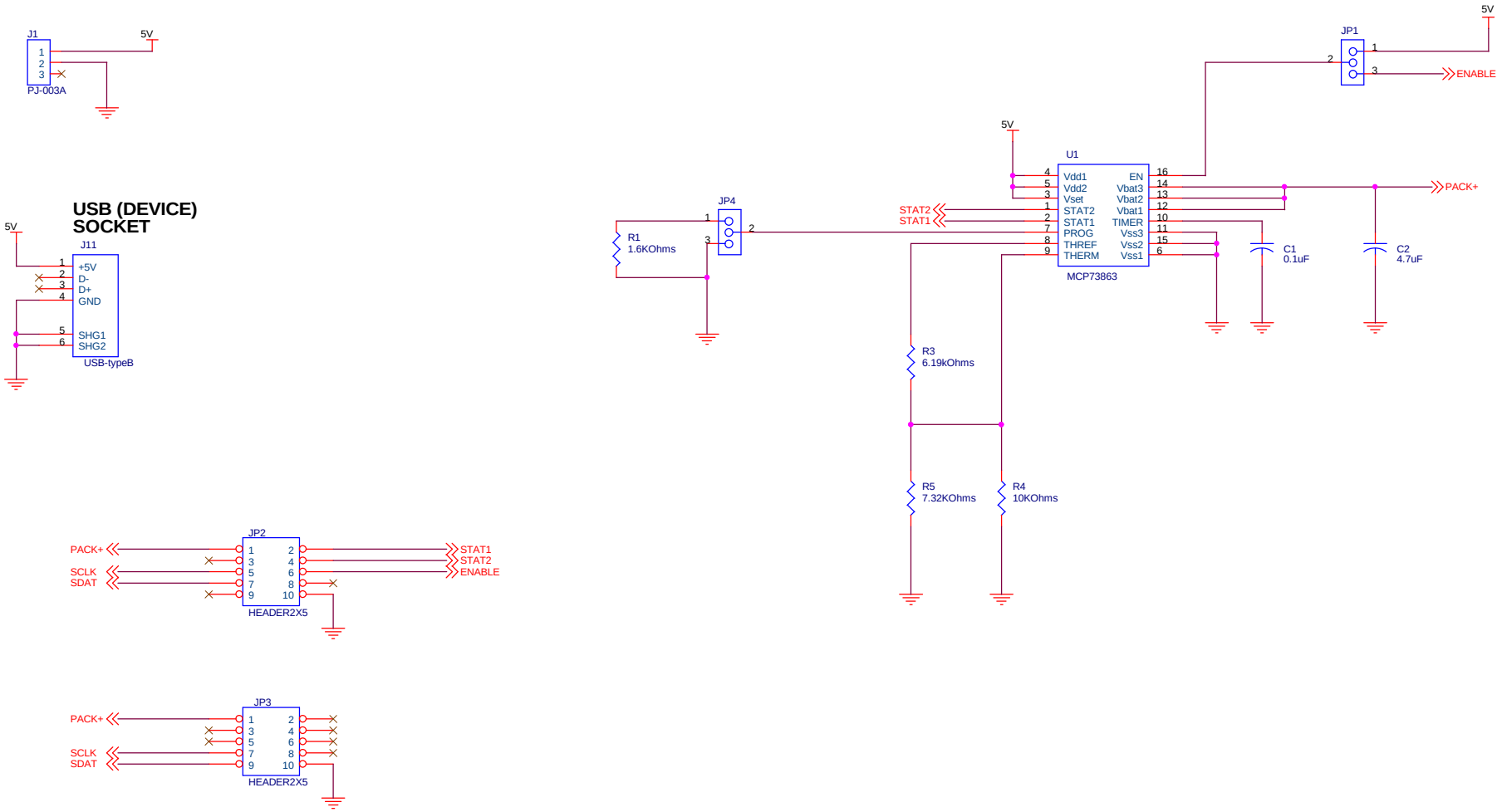

Title	M8022 Battery Charger Board	
Size B	Document Number M8022-001	Rev 001
Date: Tuesday, November 13, 2007	Sheet 1 of 1	